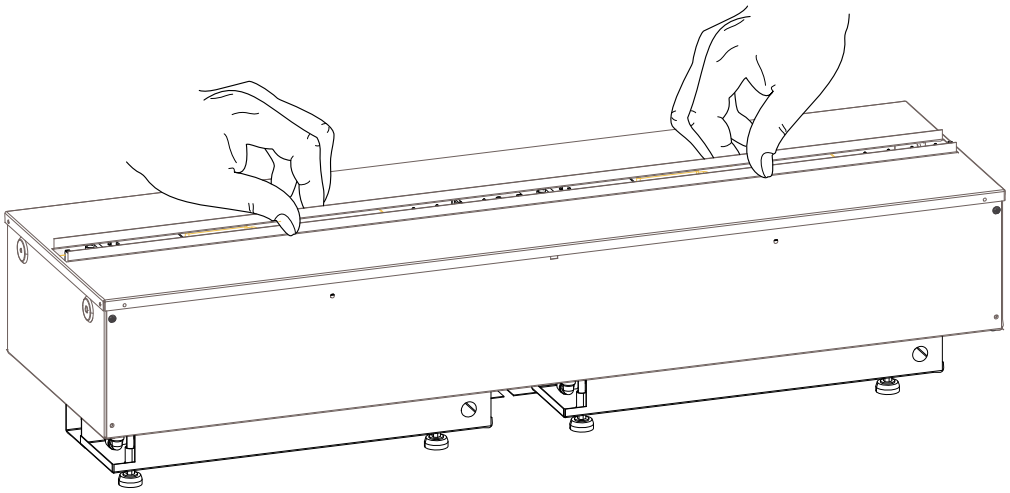

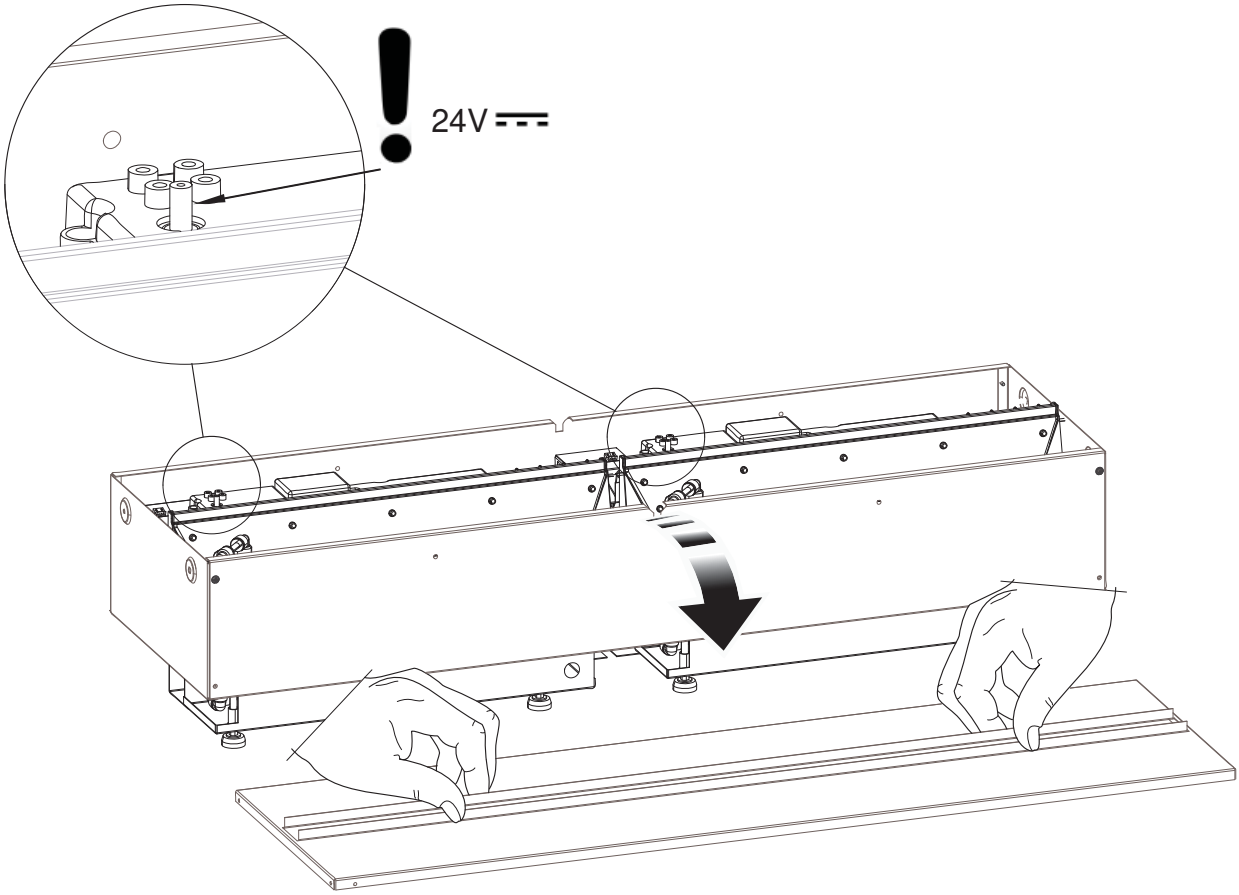
24V

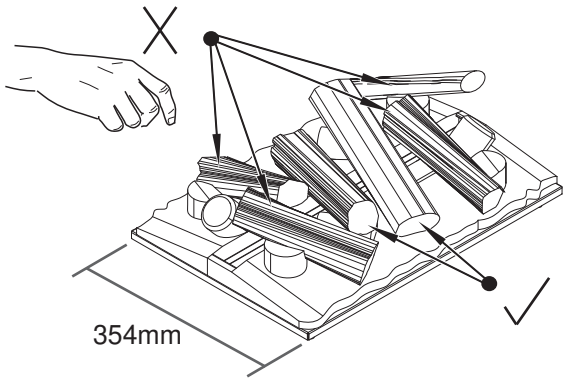
354mm

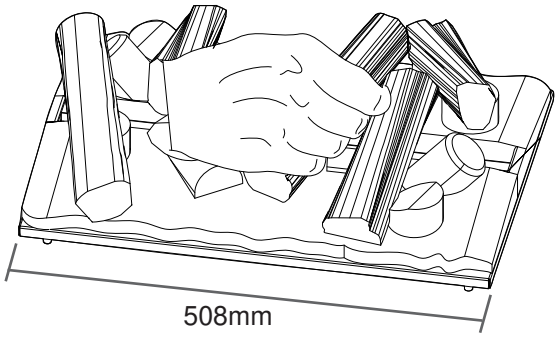
508mm

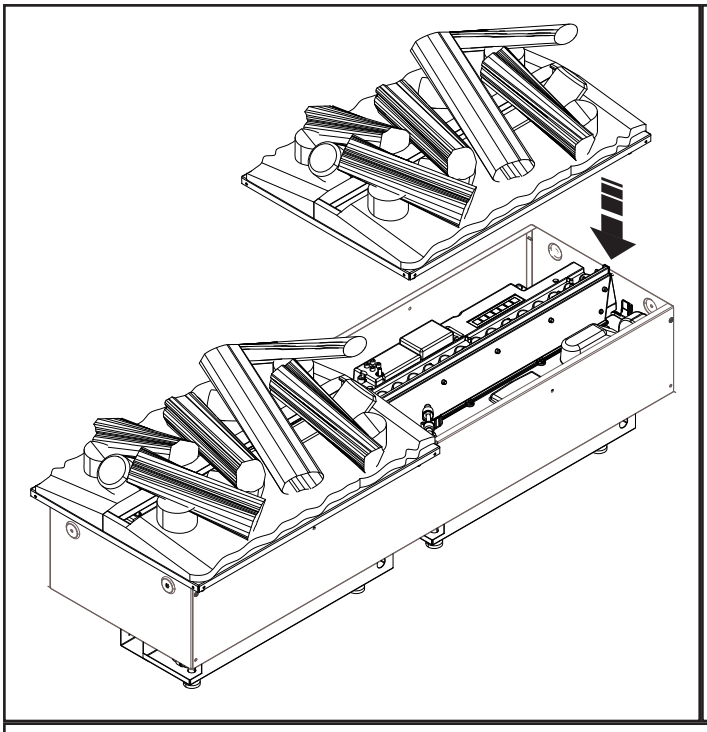

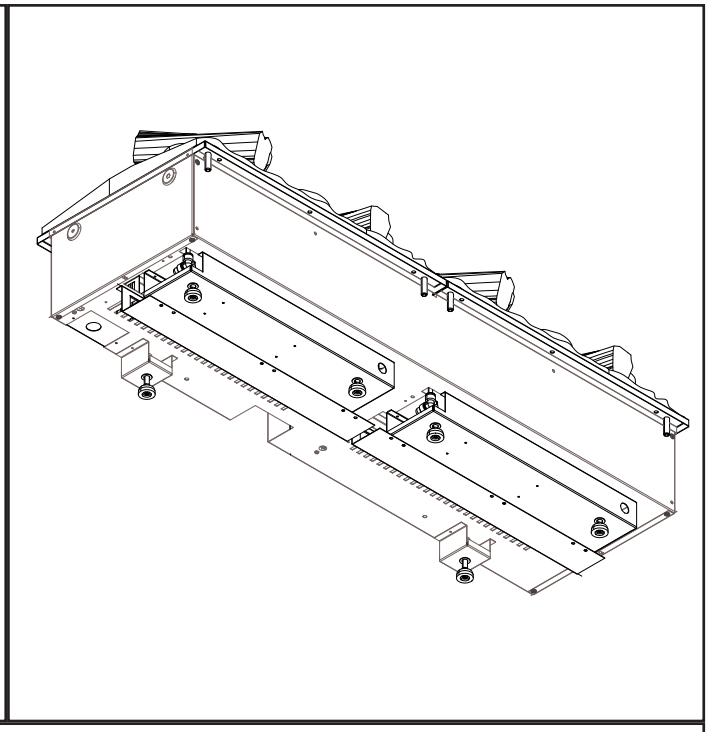

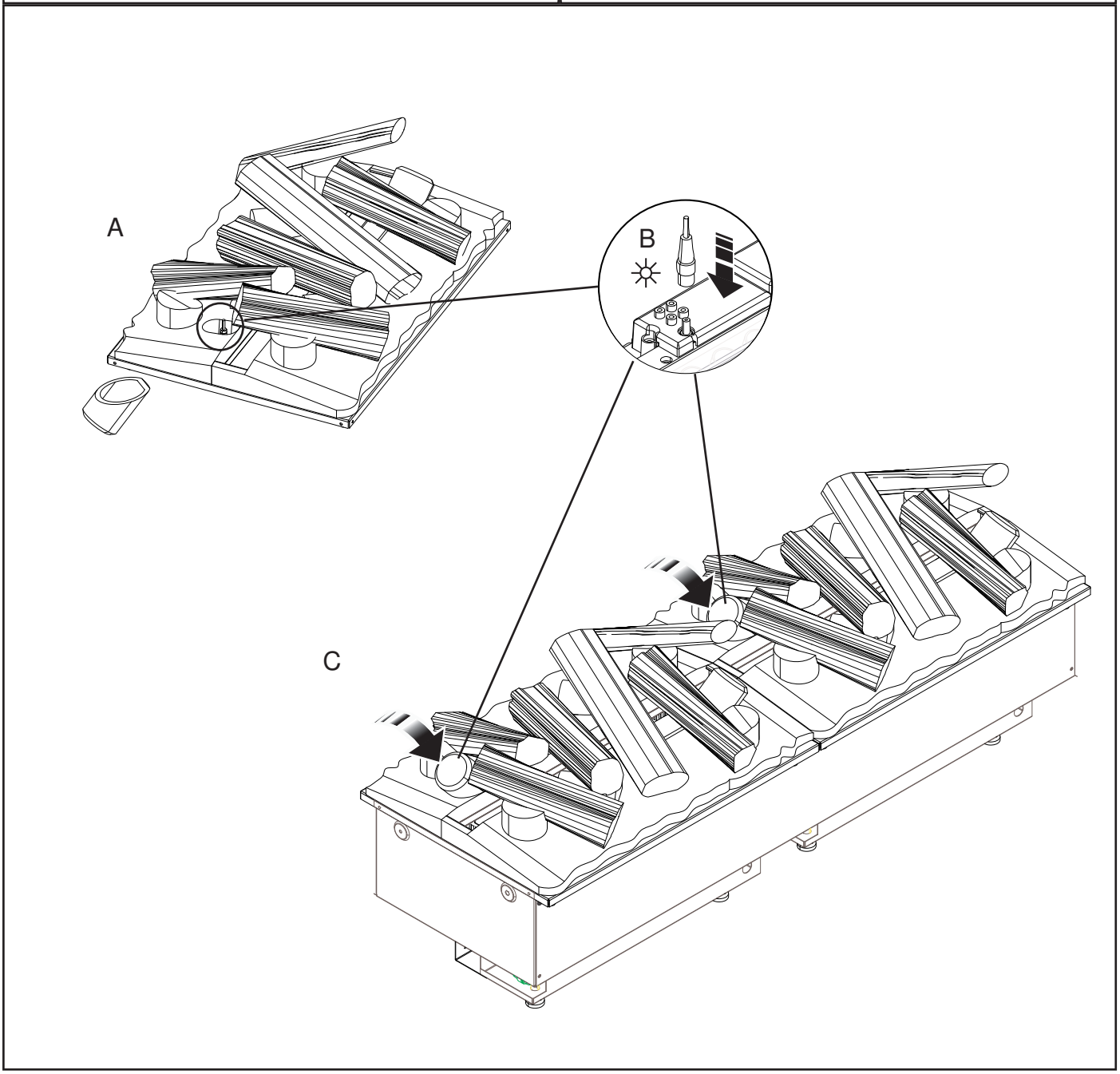
A
B
C